Current part is item (22) on diagram. Available at www.oshkoshequipment.com

(1) ILLUS. (a) FIG. NO.	(b) ITEM NO.	(2) SMR CODE	(3) NATIONAL STOCK NUMBER	(4) PART NUMBER	(5) FSCM	(6) DESCRIPTION USABLE ON CODE	(7) U/M	(8) QTY INC IN UNIT
						2001-HOIST,CAPSTAN,WINDLASS,CRANE OR WINCH ASSEMBLY (CONT'D)		
275	1	PAFFH	2590-00-351-7865	7954486	19207	WINCH,DRUM,VEHICLE: REAR MOUNTED (M756A2)	EA	1
275	2	PAFZZ	5305-00-782-9494	MS90725-114	96906	SCREW,CAP,HEXAGON HEAD: WORM DRIVE END BEARING RETAINING PLATE (M756A2)	EA	4
275	3	PAFZZ	5310-00-584-5272	MS35338-48	96906	WASHER,LOCK: WORM DRIVE END BEARING REETAINING PLATE (M756A2)	EA	4
275	4	PAFZZ	3110-00-740-9809	7409809	19207	CAP,RETAINING: WORM DRIVE END BEARING (M756A2)	EA	1
275	5	PAFZZ	5330-00-057-3823	7409822	19207	GASKET: WORM DRIVE,END BEARING RETAINING PLATE (M756A2)	EA	1
275	6	PAFZZ	5330-00-286-8149	500094	21450	SEAL, PLAIN,ENCASED: WORM DRIVE SHAFT (M756A2)	EA	2
275	7	PAFZZ	3110-00-554-3929	700287	21450	BEARING,BALL: WORM DRIVE SHAFT (M756A2)	EA	1
275	8	PAFZZ	5315-00-281-7652	8327444	19207	KEY, MACHINE, GEAR: WORM, DRUM DRIVE, BEARING END (M756A2)	EA	2
275	9	PAFZZ	2590-00-231-0219	7954478	19207	WORM,DRUM DRIVE: LH (M756A2)	EA	1
275	10	PAFZZ	5305-00-880-4012	MS90725-185	96906	SCREW, CAP, HEXAGON HEAD: REAR AND TOP TENSION CHANNEL (M756A2)	EA	4
275	11	PAFZZ	5310-00-584-7888	MS35338-51	96906	WASHER,LOCK:REAR AND TOP TENSION CHANNEL (M756A2)	EA	4
275	12	PAFZZ	9520-00-740-9812	7409812	19207	CHANNEL,TENSION TIE: REAR (M756A2)	EA	1
275	13	PAFZZ	2590-00-405-1931	7954484	19207	CASE,GEAR (M756A2)	EA	1
275	14	PAOZZ	4730-00-278-3380	MS49005-10	96906	PLUG, PIPE,3-GEAR CASE, 4-FRAME (M756A2)	EA	7
275	15	PAFZZ	2520-00-740-9813	7409813	19207	CHANNEL, TENSION TIE: TOP (M756A2)	EA	1
275	16	MFFZZ		11647844	19207	BLOCK, WINCH: WOOD (MFD FROM WOOD, P/N MILW39126CLA3X4-3-8-X8-3-4 (81349)	EA	2
275	17	PAFZZ	5305-00-983-7481	MS16997-172	96906	SCREW, CAP, SOCKET HEAD, HEXAGON: FOR WINCH BLOCK (M756A2)	EA	4
275	18	PAFZZ	5315-00-281-7650	8327443	19207	KEY, MACHINE: SLIDING CLUTCH DRUM (M756A2)	EA	2
275	19	PAFZZ	2520-00-921-0478	7954473	19207	SHAFT, DRUM (M756A2)	EA	1
275	20	PAFZZ	3120-00-740-9800	7409800	19207	BEARING, SLEEVE: DRUM SHAFT (M756A2)	EA	5
275	21	PAFZZ	3020-00-740-9823	7409823	19207	GEAR, WORM WHEEL: DRUM SHAFT (M756A2)	EA	1
275	22	PAFZZ	5330-00-740-9821	7409821	19207	GASKET: GEAR CASE COVER NONMETALLIC (M756A2)	EA	1

Current part is item (22) on diagram. Available at www.oshkoshequipment.com

Current part is item (22) on diagram. Available at www.oshkoshequipment.com

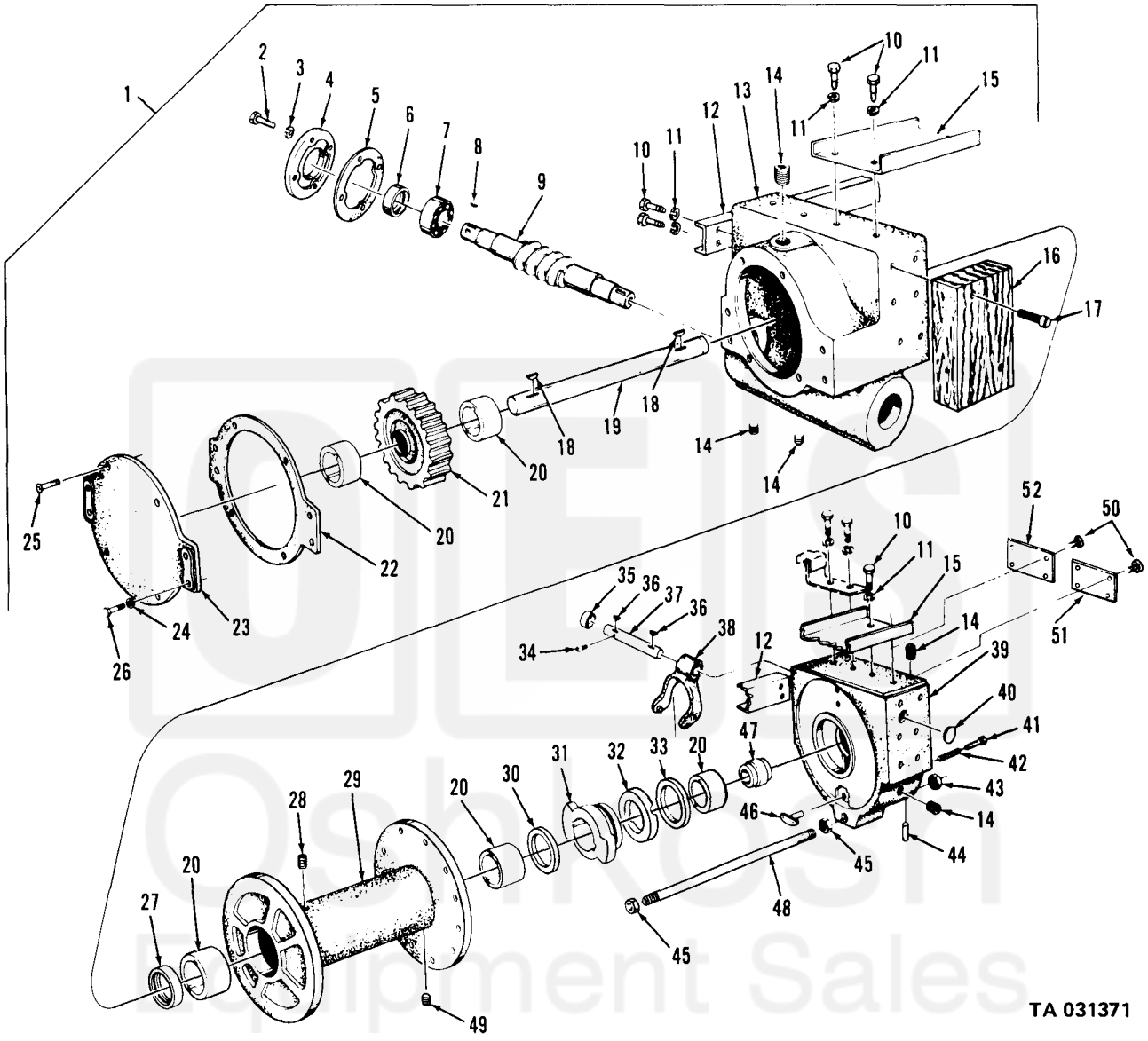

Figure 275. Rear winch basic assembly (M756A2 truck).

Current part is item (22) on diagram. Available at www.oshkoshequipment.com